Meet the

CRUMBLE

A small programmable computer (microcontroller) that can read inputs and control outputs - to bring your ideas to life in the real world.

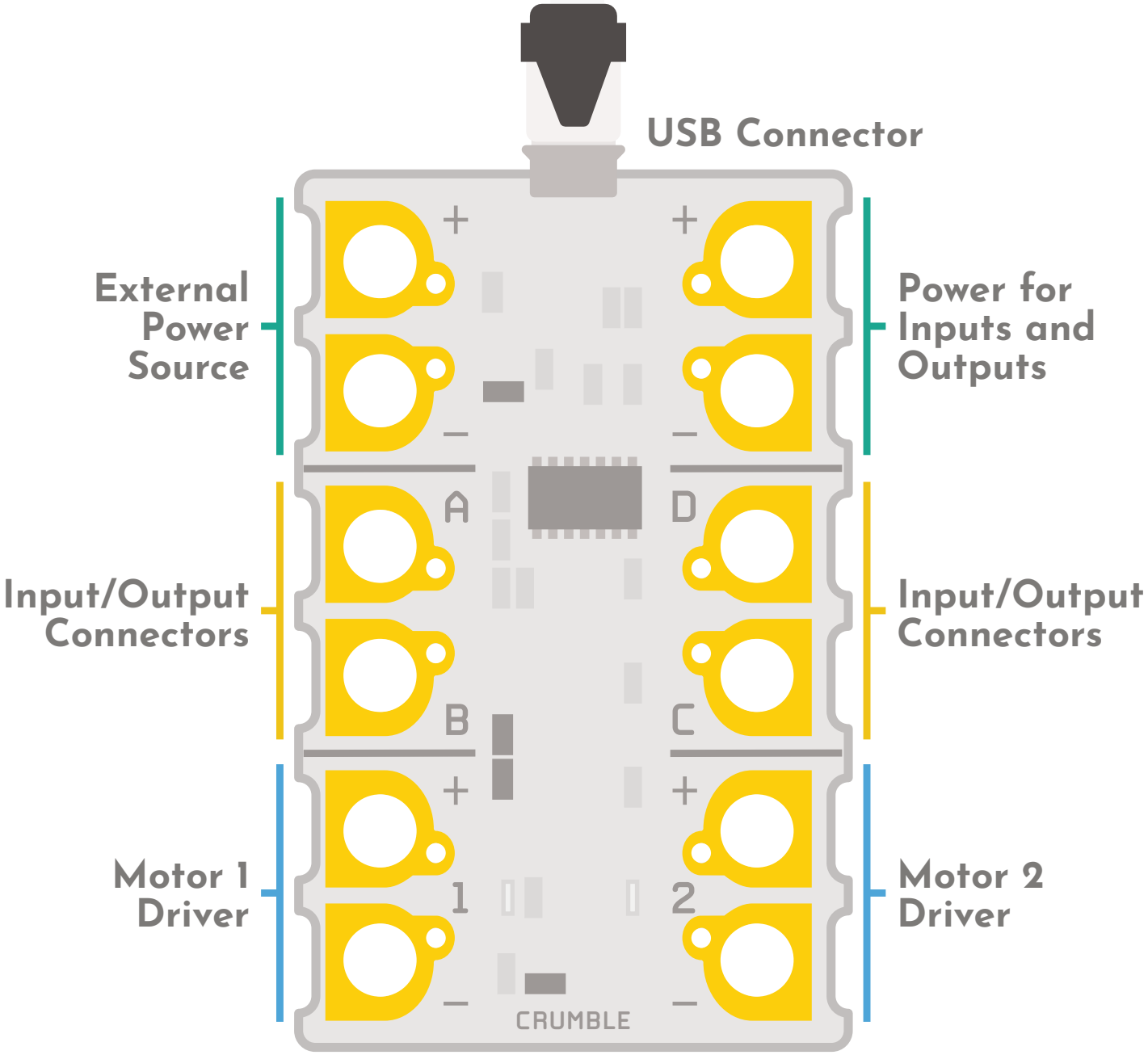

Explore how it works at sniffandsnails.com/class-hub/how-tos/crumble

SNIFF & SNAILS

Meet the

SPARKLE

OUTPUT

The Sparkle is a programmable LED (Light-Emitting Diode) that can produce a steady or flashing light in a range of colours - up to 16777216 colours in fact!

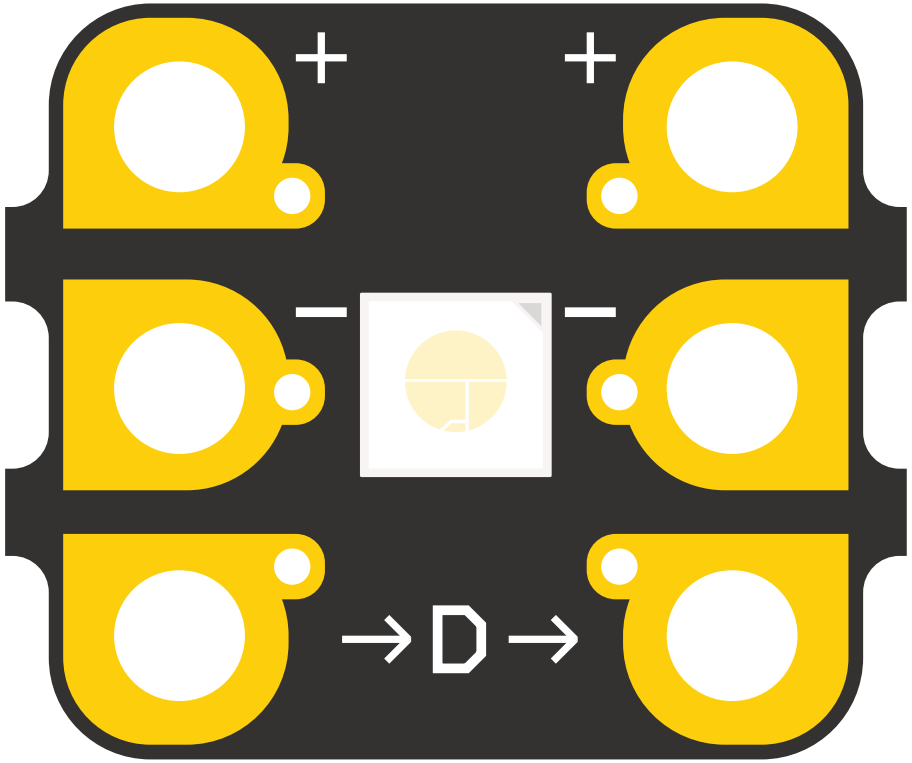

Explore how it works at sniffandsnails.com/class-hub/how-tos/sparkle

SNIFF SNAILS

Meet the

BUZZER

OUTPUT

The buzzer is a simple sound output device that is perfect for adding beeps and alerts to your projects.

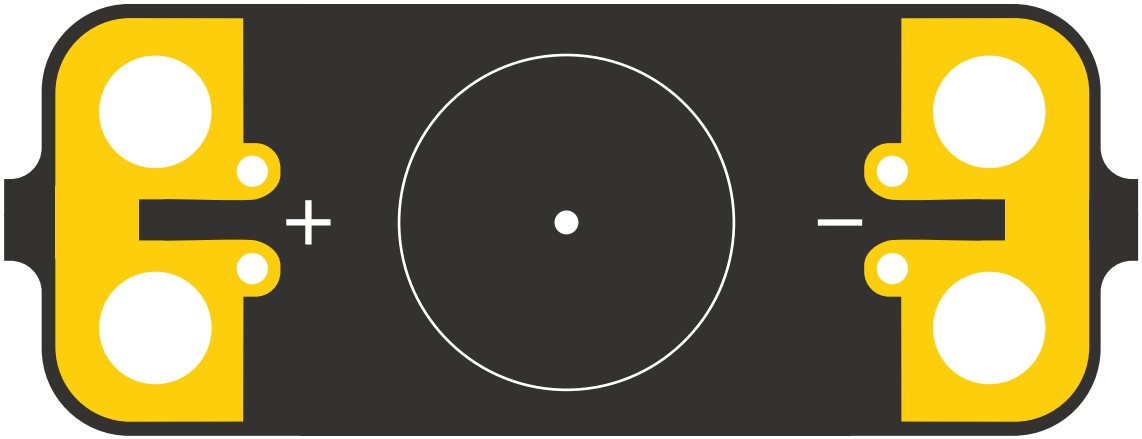

Explore how it works at sniffandsnails.com/class-hub/how-tos/buzzer

SNIFF SNAILS

Meet the

MOTOR

OUTPUT

The motor is an output device that can be programmed to go forwards, backwards, turn, and run at different speeds.

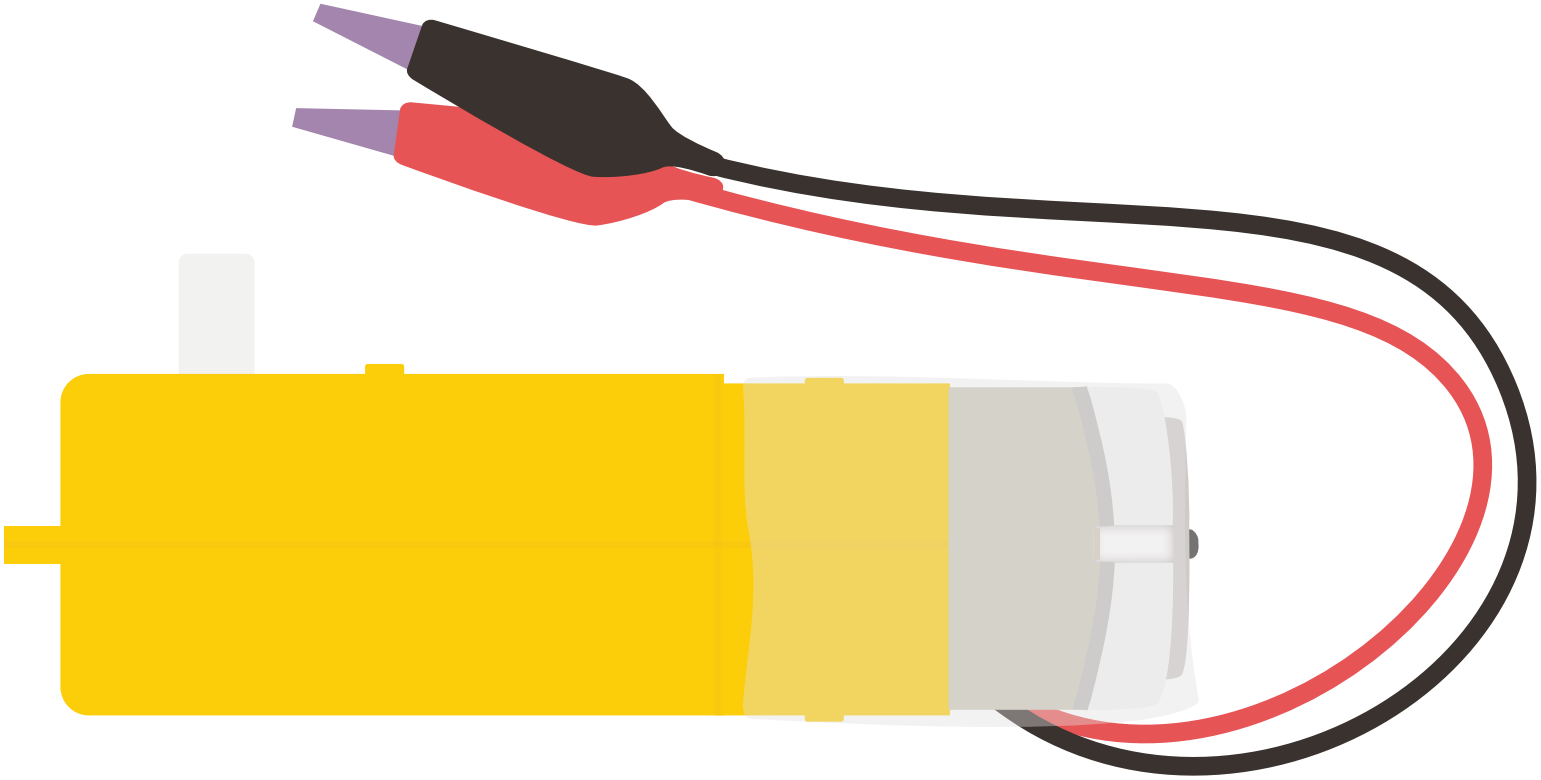

Explore how it works at sniffandsnails.com/class-hub/how-tos/motor

SNIFF SNAILS

Meet the

PUSH SWITCH

INPUT

The push switch is a simple input device that enables you to trigger and control outputs at the push of a button.

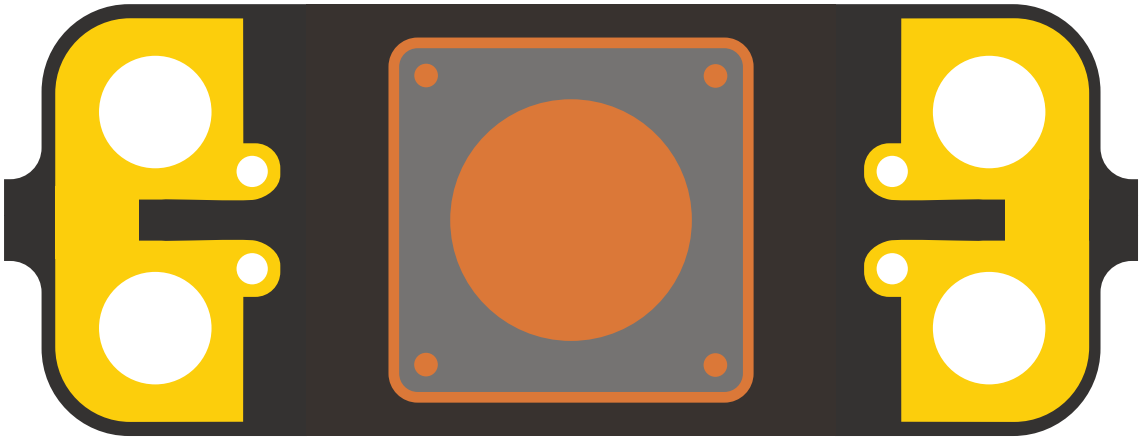

Explore how it works at sniffandsnails.com/class-hub/how-tos/push-switch

SNIFF SNAILS

Meet the

LIGHT SENSOR

INPUT

The light sensor is an input device that enables you to trigger and control outputs based on light levels recorded.

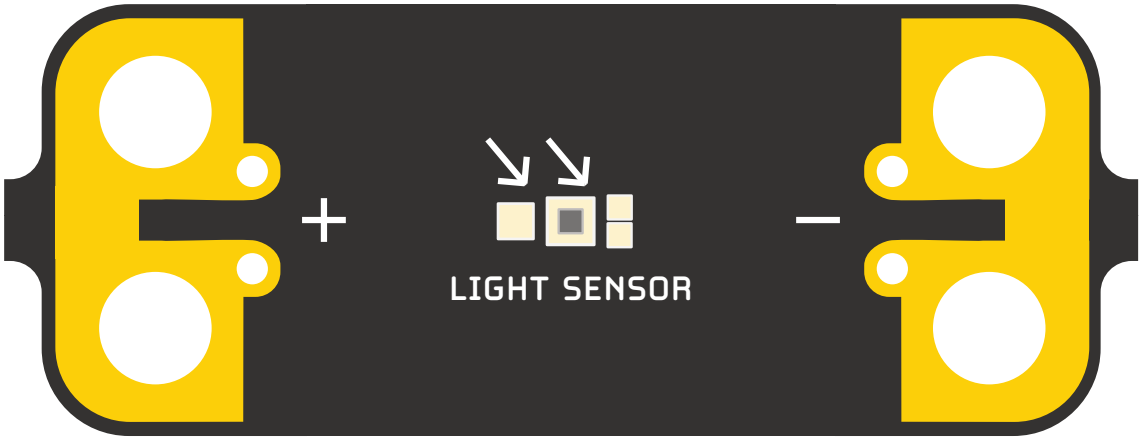

Explore how it works at sniffandsnails.com/class-hub/how-tos/light-sensor

SNIFF SNAILS